SCREW: E0941	MATERIAL: ALUMINUM	REV: M	
CAT. NO.: T3A4-250N	PLATING: EL-TIN	DRAWN BY:CLH	SCALE: 1:1
INFORMATION SHEET:FORM 1	MARKING: ILSCO, T3A4-250N, 250MCM-6, AL9CU	DATE:1/2/2008	SIZE: B

ILSCO connections matter
800-776-9775 www.ilsco.com

DWG NO: D1550-22
SHEET: 1 OF 1

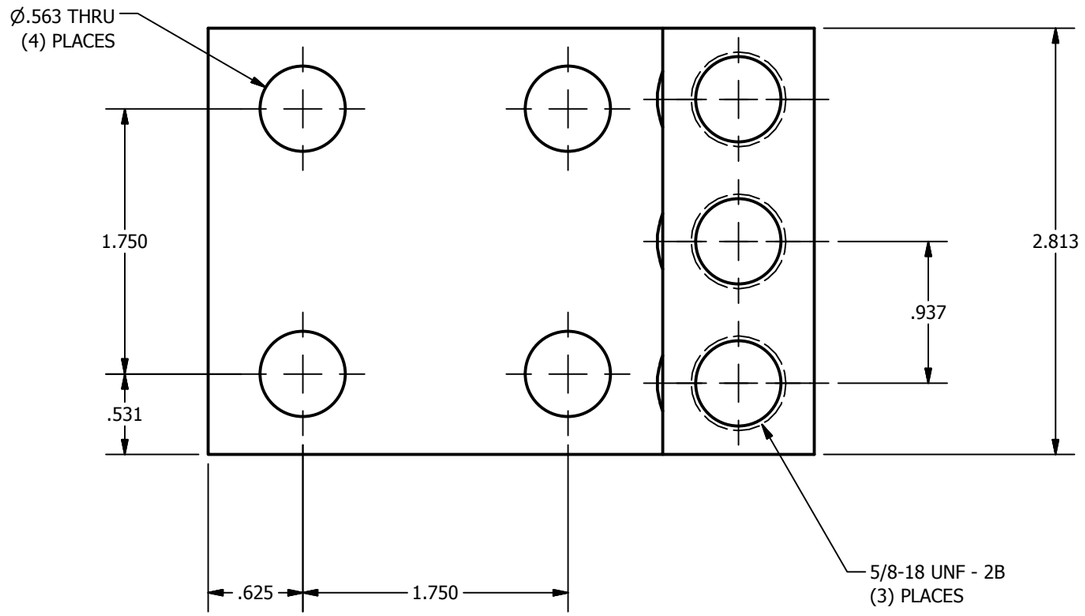

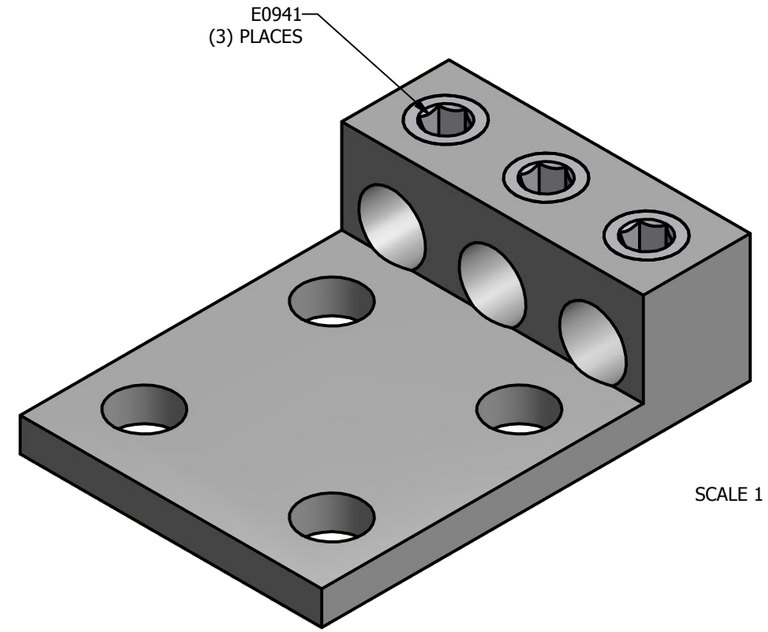

SCALE 1 : 1

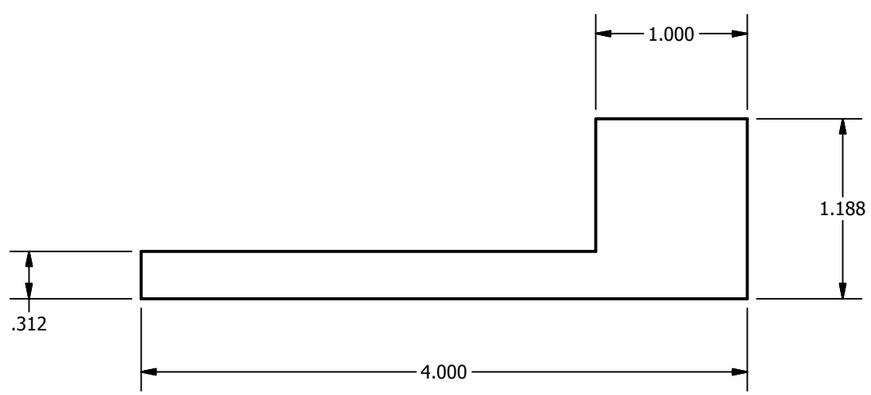

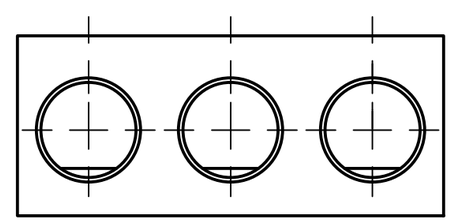

THE INFORMATION CONTAINED WITHIN THIS DOCUMENT IS PROPRIETARY TO ILSCO AND MAY NOT BE DISCLOSED WITHOUT PRIOR WRITTEN CONSENT