M-6168 | 4

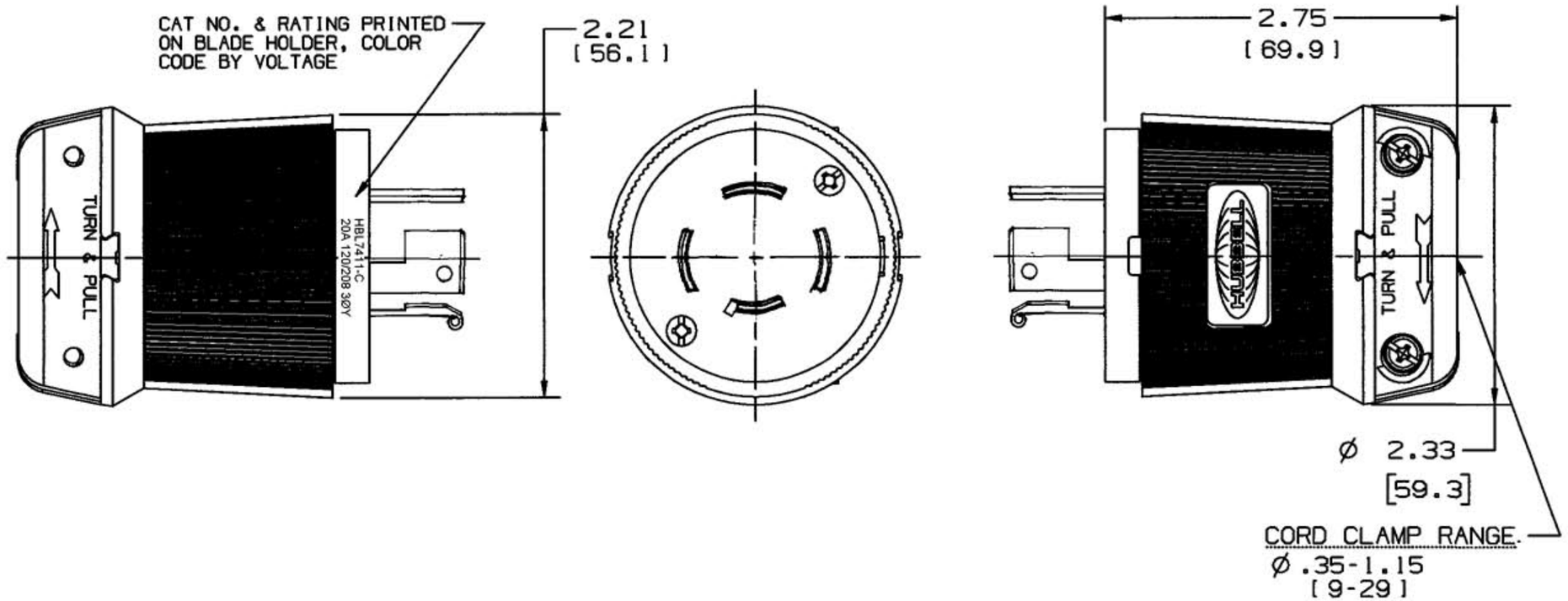

LEGEND:
IN.
[mm]

CAT. NO	CONFIGURATION	RATING	UL
HBL7411-C	4 POLE 4 WIRE	20A 120/208V 3ØY	YES
HBL7411-GCB	3 POLE 4 WIRE	20A 250 VAC	NO

NOTES:

1. ALL SCREWS ARE COMBINATION PHILLPS/SLOTTED/ROBERTSON HEAD.
2. > INDICATES EVALUATED BY UL IN ACCORDANCE WITH IEC 309-1

LIST OF PARTS

DESCRIPTION	MATERIAL	FINISH
BLADE HOLDER	NYLON	NATURAL
RETAINER	POLY CARBONATE	CLEAR
COVER	NYLON	BLACK
WIRE CLAMP	.080 C. R. S.	NICKEL PLATE
BLADES	.060 BRASS	
TERMINAL SCREWS	BRASS	**
CORD CLAMP	NYLON	NATURAL

**
WHITE- NEUTRAL
GREEN- GROUND
BRASS- LINE

SYM	REVISIONS	APP	DATE
4	UPDATED VIEWS, RETAINER MAT. POLY. WAS LEXAN PER DCN 8996 MYA	CJC	10/16/01
3	5/25/00 REVISED SCREW TO TRIDRIVE; ADDED ROBERTSON TO NOTE PER DCN 7553 RCM	DB	5/22/00
2	NUMEROUS CHANGES, SEE RECORD PRINT PER DCN 4114. DJG	JZ	6-13-96
1	HBGCB WAS HBL-GC, 20A 250VAC WAS 20A 250V, 10A 600VAC PER DCN 2041	[illegible]	8-29-94

THE DESIGN AND DIMENSIONS OF THE PRODUCT SHOWN ON THIS DRAWING ARE SUBJECT TO CHANGE WITHOUT NOTICE

TITLE
20A TWISTLOCK CAPS
NON-NEMA

TOLERANCES UNLESS OTHERWISE SPECIFIED
FRACTIONS ± 1/64
DECIMALS ± .005
ANGLES ± 2°

WIRING DEVICE-KELLEMS
HUBBELL INCORPORATED
BRIDGEPORT, CT

DR. BY J.R.	APP. BY
TR. BY	SCALE FULL
CHK'D BY	DATE 4/5/79

DIMENSION SHEET FOR CAT. NO. SEE TABLE

REPAIRABLE ☐ NON-REPAIRABLE ☒

B

M-6168

4

CODE 74545