Twist-Lock® Devices

50A, 600V AC, 250V DC, 3 Pole, 4 Wire Grounding

Receptacle

HUBBELL

Features

- Thermoset construction offers high heat resistance
- Armored housing provides superior impact resistance
- One piece contacts provide low operating temperatures

Ordering Information

Description	Device Color	UPC	Catalog Number
Phenolic	Black	783585237176	**HBL7379**

Listings

Listed to UL 498
Certified to CSA C22.2 No.42

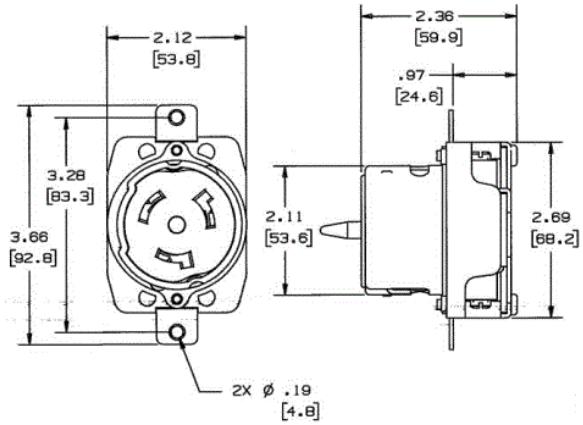

Specifications

Body	Phenolic
Face	Phenolic
Contacts	Brass
Terminal Screws	Steel
Insulator	Phenolic

Performance

Electrical

Current Interrupting	Certified for current interrupting at full rated current
Dielectric Voltage	Withstands 2,000V minimum

Mechanical

Terminal Accommodation	#10 AWG - #4 AWG solid or stranded copper wire only

Environmental

Flammability	UL 94 V0
Operating Temperatures	Maximum continuous 75°C; minimum –40°C (w/o impact)

Accessories

Plug	**HBL7765C**
Weatherproof Lift Cover	**HBL7774WO**
Single Gang Stainless Steel Wallplate	**SS750**
4" Square Raised Cover	**HBL50SC**

Online Resources

Customer Use Drawing
eCatalog
Installation Instructions

Dimensions in Inches (mm)

Hubbell Wiring Device-Kellems • Hubbell Incorporated (Delaware) • 40 Waterview Drive • Shelton, CT 06484
Phone (800) 288-6000 • Fax (800) 255-1031 • Specifications subject to change without notice.

HUBBELL®
Wiring Device-Kellems