M-12931 | 1

CATALOG NUMBER	BODY COLOR	GOTCHA RING COLOR CODE	NPT HUB SIZE	CORD DIA. RANGE	ØA (OVERALL)	(B) 4	C	ØD (THROAT DIA.)	*E ACROSS CORNERS	*E ACROSS FLATS
SHC2035CR	BLACK	BLUE	3/4"	.38–.50 [9.5–12.7]	1.56 [39.6]	1.60 [40.6]	.55 [14.0]	.77 [19.6]	1.44 [36.6]	1.30 [33.0]
SHC2036CR	BLACK	BROWN	3/4"	.50–.63 [12.7–15.9]	1.56 [39.6]	1.60 [40.6]	.55 [14.0]	.77 [19.6]	1.44 [36.6]	1.30 [33.0]
SHC2037CR	BLACK	YELLOW	3/4"	.63–.75 [15.9–19.0]	1.56 [39.6]	1.60 [40.6]	.55 [14.0]	.77 [19.6]	1.44 [36.6]	1.30 [33.0]
SHC2038CR	BLACK	ORCHID	3/4"	.75–.88 [19.0–22.2]	1.56 [39.6]	1.60 [40.6]	.55 [14.0]	.77 [19.6]	1.44 [36.6]	1.30 [33.0]
SHC1035CR	GRAY	BLUE	3/4"	.38–.50 [9.5–12.7]	1.56 [39.6]	1.60 [40.6]	.55 [14.0]	.77 [19.6]	1.44 [36.6]	1.30 [33.0]
SHC1036CR	GRAY	BROWN	3/4"	.50–.63 [12.7–15.9]	1.56 [39.6]	1.60 [40.6]	.55 [14.0]	.77 [19.6]	1.44 [36.6]	1.30 [33.0]
SHC1037CR	GRAY	YELLOW	3/4"	.63–.75 [15.9–19.0]	1.56 [39.6]	1.60 [40.6]	.55 [14.0]	.77 [19.6]	1.44 [36.6]	1.30 [33.0]
SHC1038CR	GRAY	ORCHID	3/4"	.75–.88 [19.0–22.2]	1.56 [39.6]	1.60 [40.6]	.55 [14.0]	.77 [19.6]	1.44 [36.6]	1.30 [33.0]

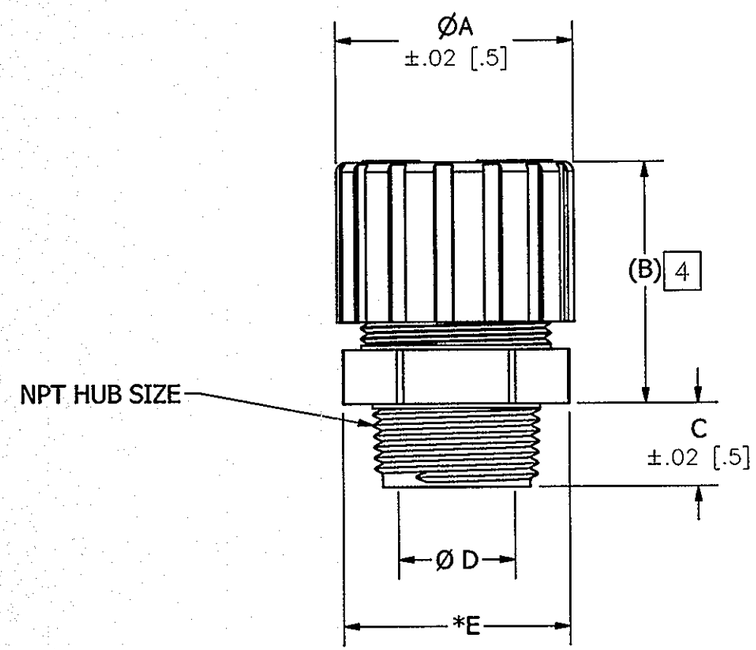

NOTES:

1. DIMENSIONS ARE IN INCHES [MM].
2. LOCKNUT PURCHASED SEPARATELY.
3. BUSHING COATED WITH AMBER PETROLEUM JELLY.

4 REFERENCE ONLY, DIMENSION MAY VARY.

LIST OF PARTS

DESCRIPTION	MATERIAL	FINISH
CORD CONN. BODY, STR. MALE	NYLON	SEE TABLE
NUT	NYLON	SEE TABLE
BUSHING	BLACK NEOPRENE	SEE NOTE 3
GOTCHA RING	NYLON	SEE TABLE

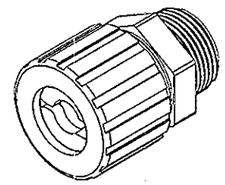

CATALOG NO. SHC2035CR
(NOT SHOWN TO SCALE)

REV	DESCRIPTION	APP	DATE
1	INITIAL RELEASE PER DCN 21189	DDL PJB	05/06/15

THE DESIGN AND DIMENSIONS OF THE PRODUCT SHOWN ON THIS DRAWING ARE SUBJECT TO CHANGE WITHOUT NOTICE

TITLE
STRAIGHT NYLON CORD CONNECTOR FORM 3

TOLERANCES UNLESS OTHERWISE SPECIFIED
.XX = ± .01
.XXX = ± .005
ANGLES = ± 2°

WIRING DEVICE-KELLEMS
HUBBELL INCORPORATED
SHELTON, CT

DR. BY	SR	APP. BY	
TR. BY		SCALE	1:1
CHK. BY	DDL	DATE	05/06/15

DIMENSION SHEET FOR CAT. NO.
SEE TABLE

REPAIRABLE ☐ NON-REPAIRABLE ☐

B

M-12931

1

CODE 74545